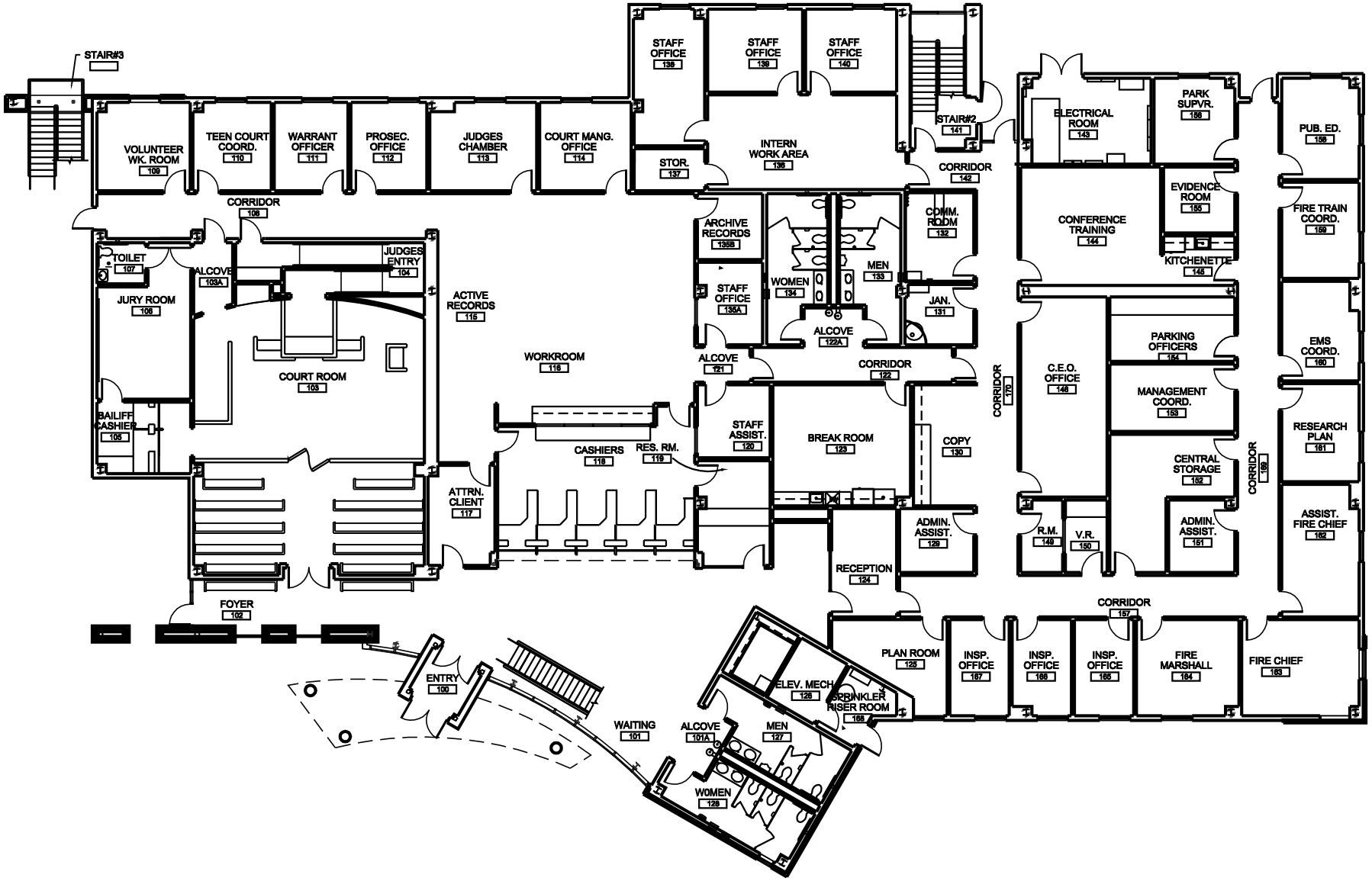

COLLEGE STATION MUNICIPAL COMPLEX

FIRST FLOOR

MAY 16, 2002

HIDELL AND ASSOCIATES ARCHITECTS

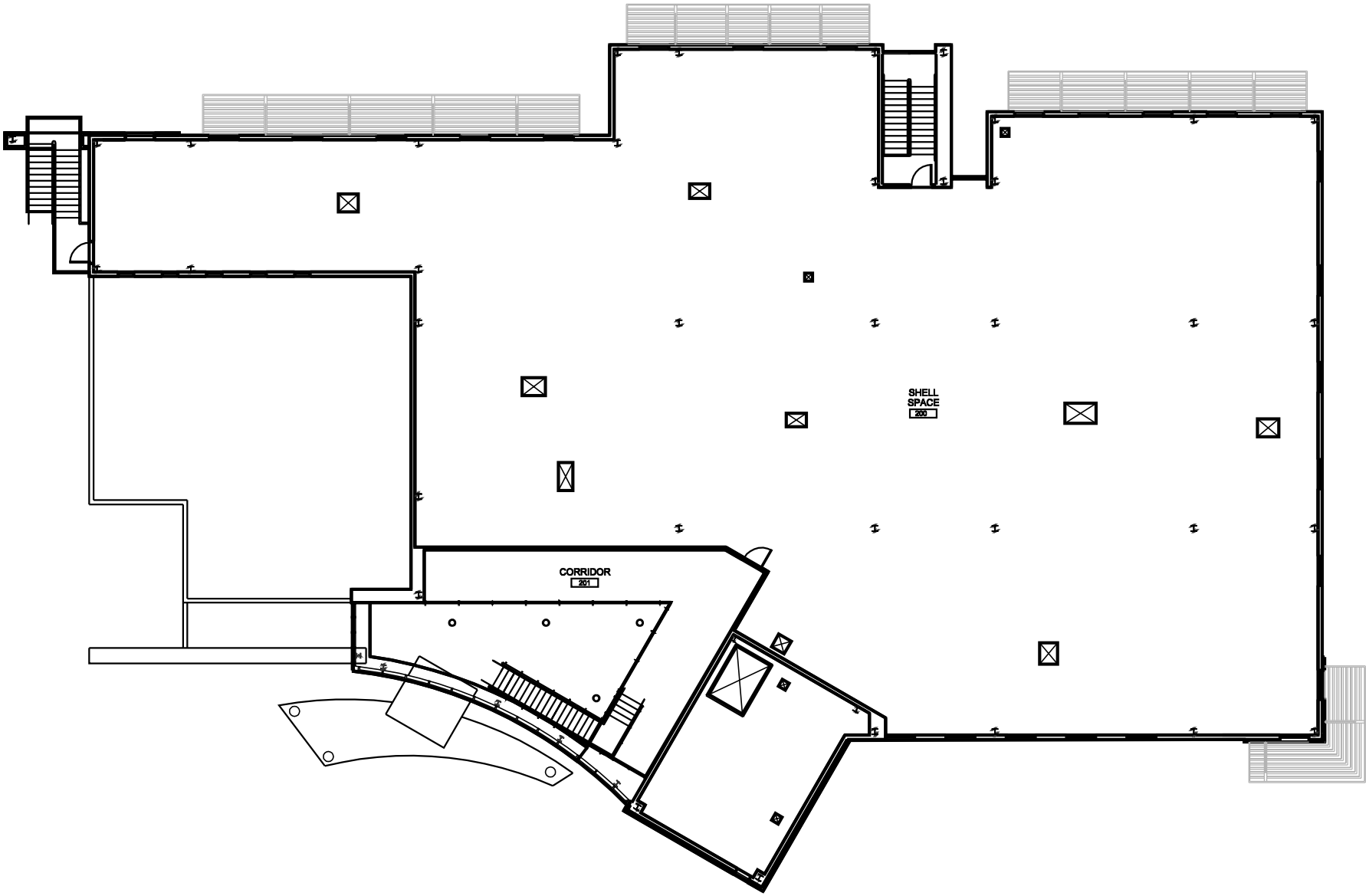

COLLEGE STATION MUNICIPAL COMPLEX

SECOND FLOOR

MAY 16, 2002

HIDELL AND ASSOCIATES ARCHITECTS

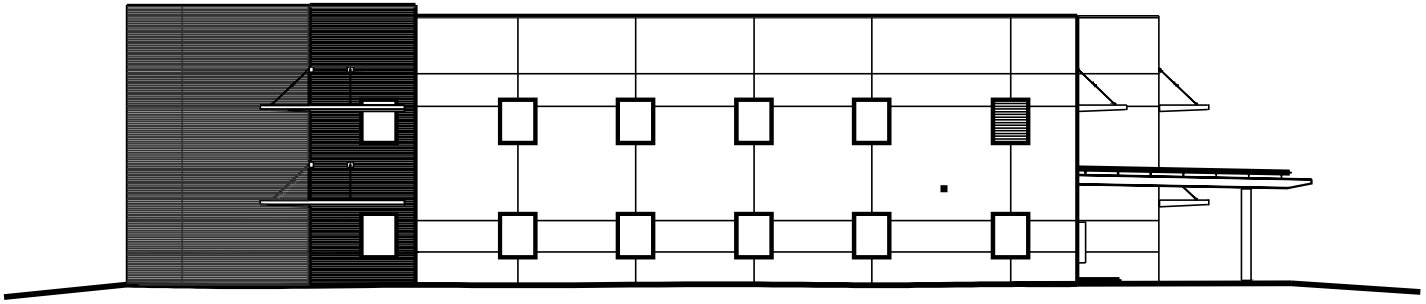

COLLEGE STATION MUNICIPAL COMPLEX

WEST ELEVATION

MAY 16, 2002

HIDELL AND ASSOCIATES ARCHITECTS

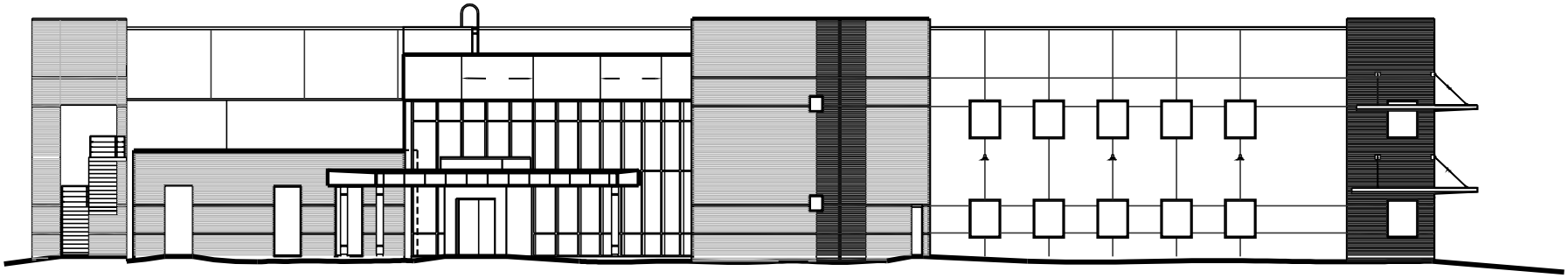

COLLEGE STATION MUNICIPAL COMPLEX

NORTH ELEVATION

MAY 16, 2002

HIDELL AND ASSOCIATES ARCHITECTS

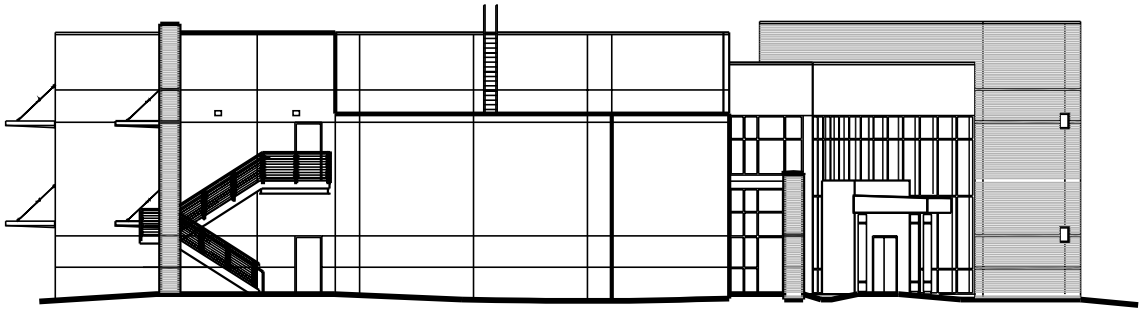

COLLEGE STATION MUNICIPAL COMPLEX

EAST ELEVATION

MAY 16, 2002

HIDELL AND ASSOCIATES ARCHITECTS

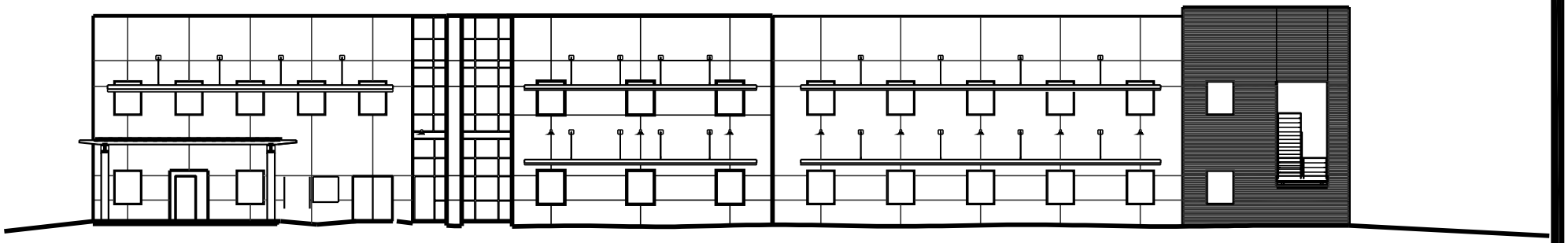

COLLEGE STATION MUNICIPAL COMPLEX

SOUTH ELEVATION

MAY 16, 2002

HIDELL AND ASSOCIATES ARCHITECTS